F SERIES

W2-780SD

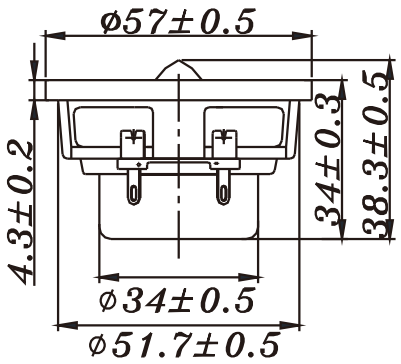

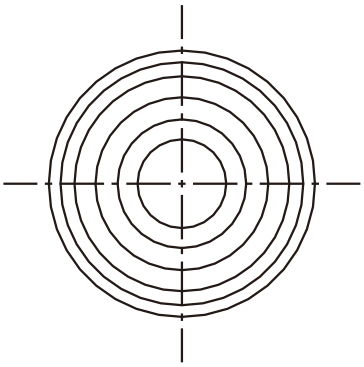

- FULL RANGE DESIGN
- ABS BASKET, AL PHASE PUG FOR COOLING
- POLY CONE WITH TPR SURROUND
- NEODYMIUM MAGNET DESIGN
- GOOD FOR MULTI-MEDIA, HOME THEATER, CAR APPLICATION

2" POLYCONE FULL RANGE

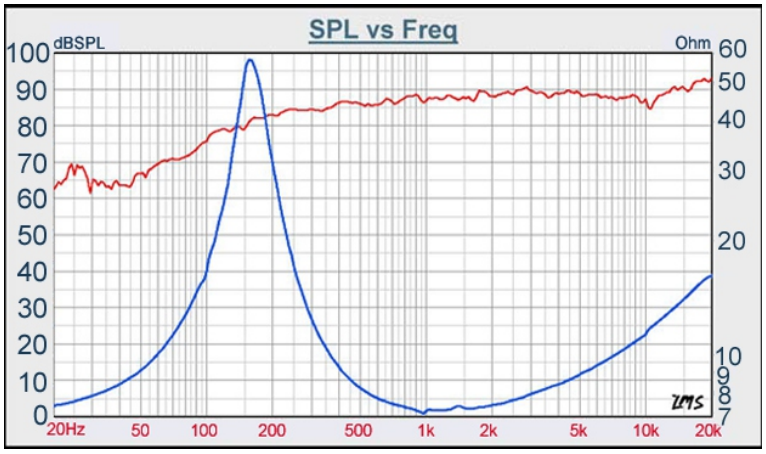

DIAPHRAGM MTL	PPM
SURROUND MTL	TPR
NOMINAL IMPEDANCE	8 Ω
DCR IMPEDANCE	6 Ω
SENSITIVITY 1W/1m	86 dB
FREQUENCY RESPONSE	155 - 20K Hz
FREE AIR RESONANCE	155 Hz
VOICE COIL DIAMETER	20.4 mm
AIR GAP HEIGHT	3 mm
RATED POWER INPUT	8 W
MAXIMUM POWER INPUT	16 W
FORCE FACTOR, BL	3.64 TM
TYPE OF MAGNET	Neodymium
MOVING MASS	0.87 g
FERROFLUID ENHANCED	No
SUSPENSION COMPLIANCE	1208 uMN^{-1}
EFFECTIVE PISTON AREA	0.0013 M^2
Levc	0.04 mH
Zo	58 Ω
X-max	1 mm
Vas	0.29 Litr
Qts	0.35
Qms	3.89
Qes	0.39

TB SPEAKERS
VOICE: 886.2.26570282 FAX: 886.2.26580166
E-MAIL:info@tb-speaker.com